Practical 9

Aim: Deploy an IoT application which will alert you by beeping or vibrating your phone whenever you get someone call your name

Theory:

Arduino:

Arduino is an open-source platform used for building electronics projects. Arduino consists of both a physical programmable circuit board (often referred to as a microcontroller) and a piece of software, or IDE (Integrated Development Environment) that runs on your computer, used to write and upload computer code to the physical board.

Arduino is an open-source electronics platform based on easy-to-use hardware and software. Arduino boards are able to read inputs - light on a sensor, a finger on a button, and turn it into an output - activating a motor, turning on an LED light.

The Arduino software is easy-to-use for beginners, yet flexible enough for advanced users.

Arduino also simplifies the process of working with microcontrollers

Requirement:

- Vibration sensor
- Arduino Uno
- LED Blue
- Virtual Terminal
- Logic toggle
- Ground
- Power

Step 1: Configure the system

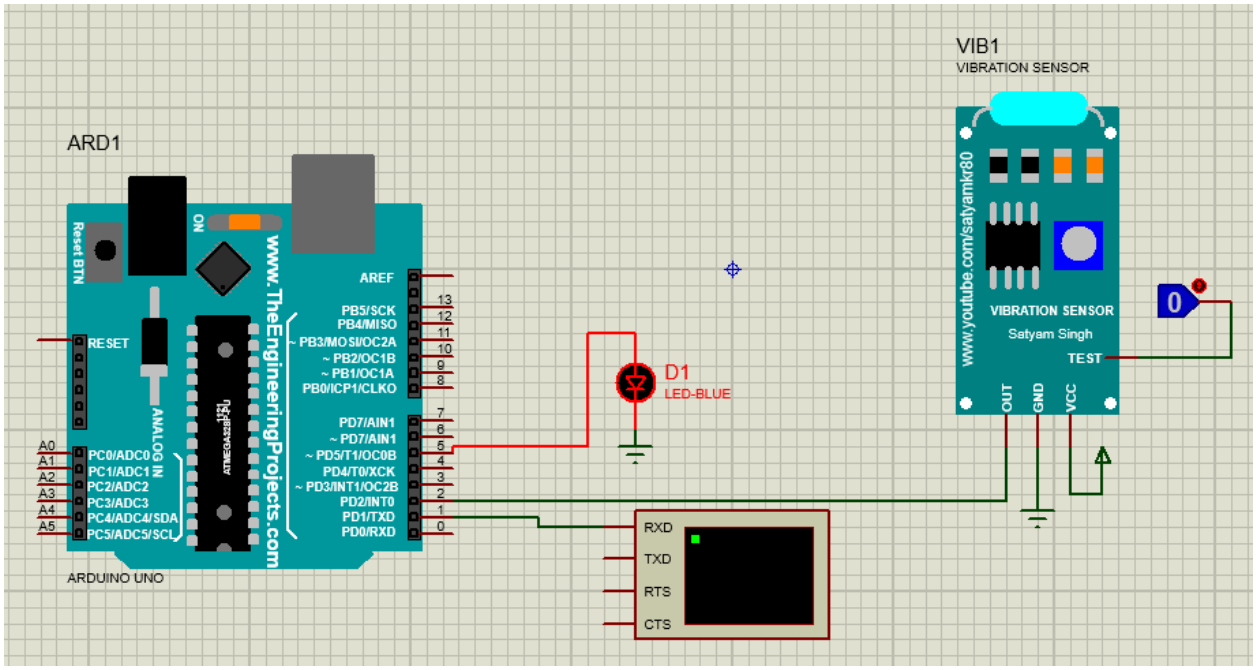

Step 2: Write the code for the Arduino Microcontroller using the Arduino IDE

prac9

```
int b1 = 2;
int d1 = 5;

int cnt = 0,cnt2;
int timer=0;

int pos = 0; //variablt to store servo position //max of 8 servo objects can be created.

void setup()
{
  Serial.begin(9600); //intialize serial
  pinMode(b1, INPUT_PULLUP);
  pinMode(d1, OUTPUT);
  digitalWrite(d1,HIGH);
  digitalWrite(d1,LOW);
  delay(300); //Wait for a Second
  cnt = 0;
}

void loop()
{
  if(digitalRead(b1) == HIGH)
  {
    Serial.println("Someone is coming.VIBRATION ALERT!");

    digitalWrite(d1, HIGH);
    delay(300); //Wait for a Second
    digitalWrite(d1, LOW);
    delay(300); //Wait for a Second

    digitalWrite(d1, HIGH);
    delay(300); //Wait for a Second
    digitalWrite(d1, LOW);
    delay(300); //Wait for a Second

    digitalWrite(d1, HIGH);
    delay(300); //Wait for a Second
    digitalWrite(d1, LOW);
    delay(300); //Wait for a Second

  }
}
```

Step 3: After compiling the in console .hex file path it will provide

Copy the .hex file which we got in Arduino and paste in program file of the Arduino in Proteus

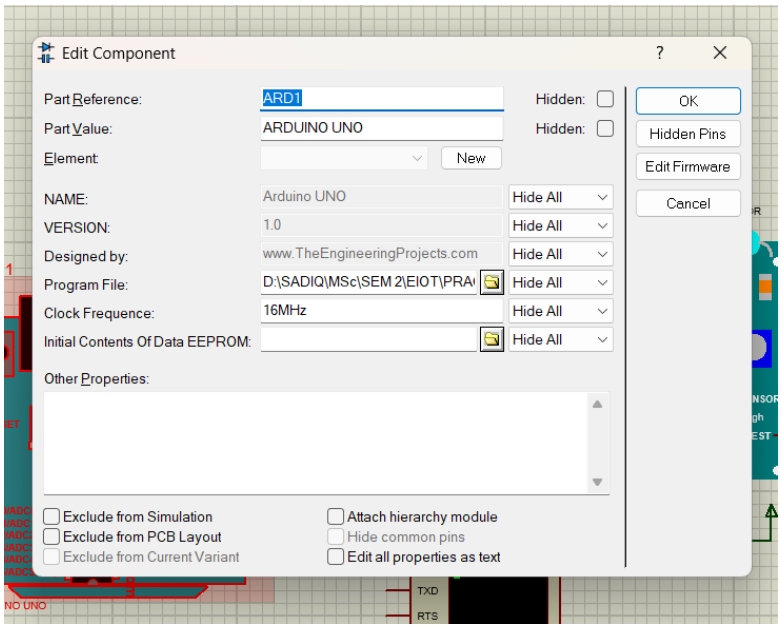

Step 4: We have to paste vibration.hex provided to us in Vibration Sensor.

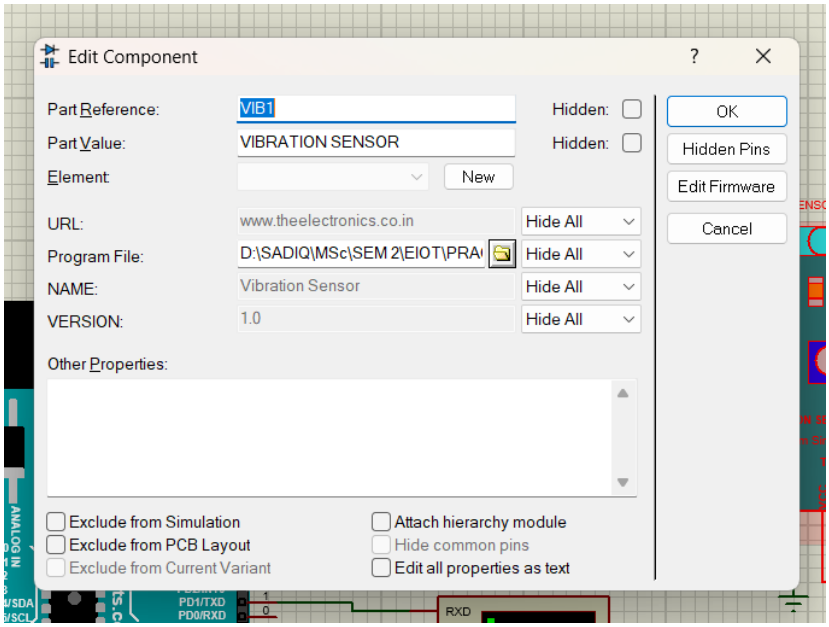

Output:

When we click on logic toggle it will turn on i.e., 1. And the message will be display. And the LED will blink.

After 3 second once again the message will be display. This will go on and on till we click on the toggle and turn it off.

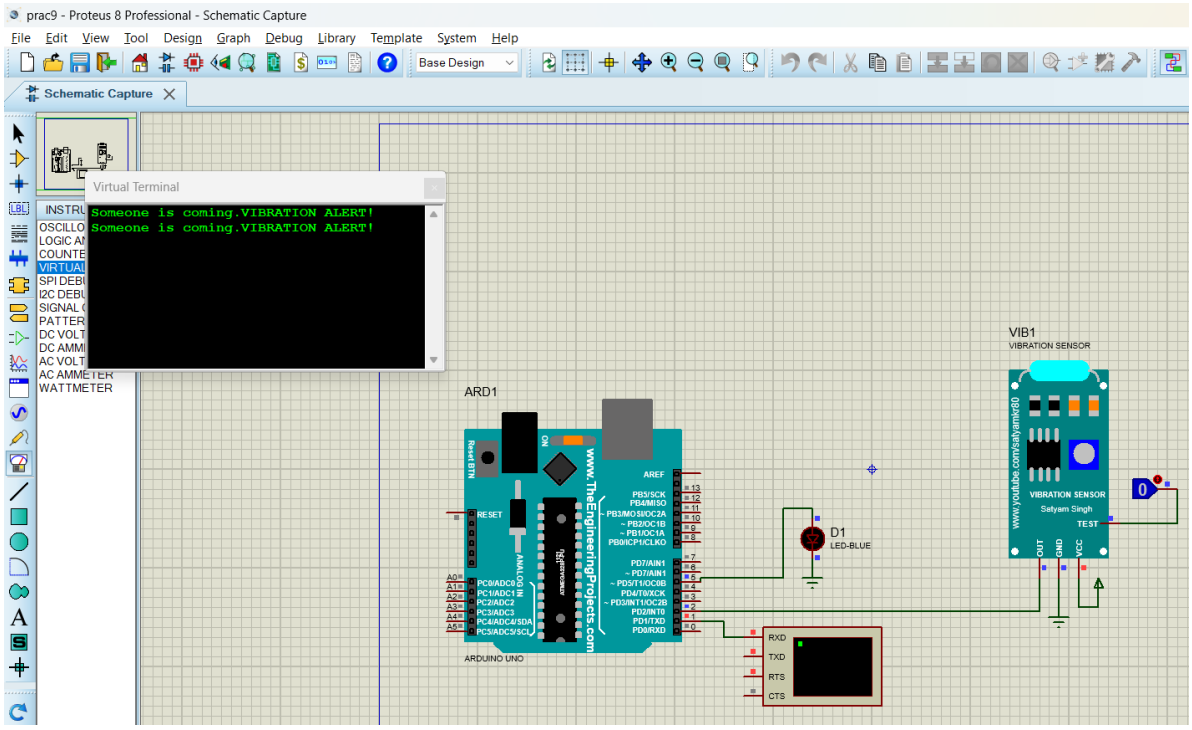

Sadiq S.

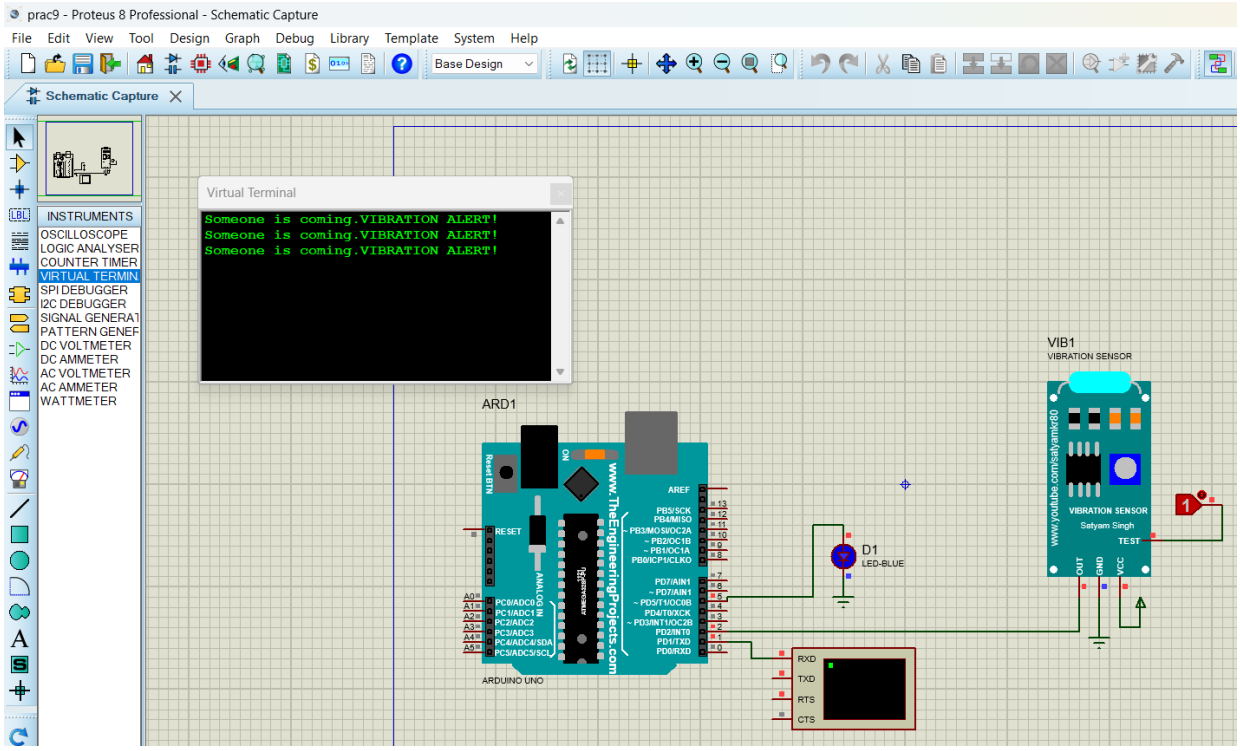
prac9 - Proteus 8 Professional - Schematic Capture
File Edit View Tool Design Graph Debug Library Template System Help
Base Design
Schematic Capture
INSTRUMENTS
OSCILLOSCOPE
LOGIC ANALYSER
COUNTER TIMER
VIRTUAL TERMIN
SPI DEBUGGER
I2C DEBUGGER
SIGNAL GENERAT
PATTERN GENER
DC VOLTMETER
DC AMMETER
AC VOLTMETER
AC AMMETER
WATTMETER
Virtual Terminal
Someone is coming.VIBRATION ALERT!
Someone is coming.VIBRATION ALERT!
Someone is coming.VIBRATION ALERT!
ARD1
ARDUINO UNO
www.TheEngineeringProjects.com
VIB1
VIBRATION SENSOR
www.youtube.com/sadiqarduino
VIBRATION SENSOR
Satyam Singh
TEST
OUT
GND
VCC
D1
LED-BLUE
RXD
TXD
RTS
CTS